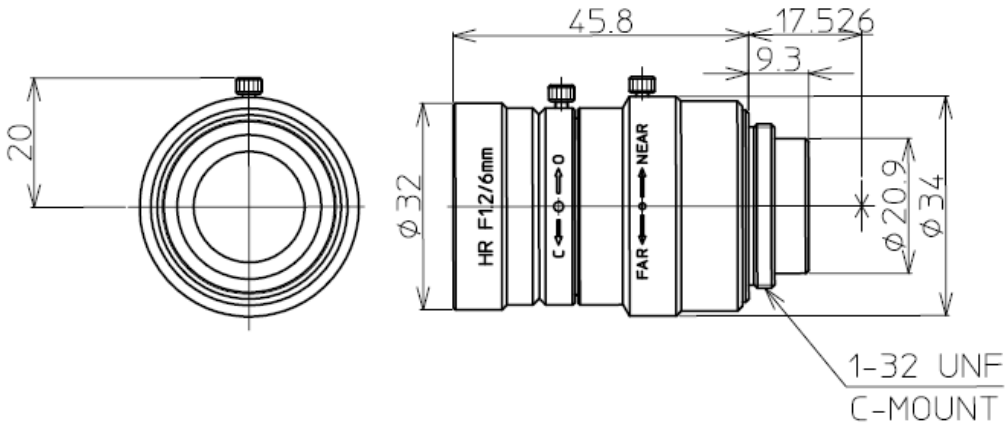

1/2" 1.2/6mm C		1/3"
FOCAL LENGTH	f=6mm	
MAX. DIAMETER (RATIO)	F=1:1.2~16	
PICTURE SIZE	4.8x6.4mm	3.6x4.8
ANGLE VER. ANGLE	43.5°	33.2°
HOR. ANGLE	56.2°	43.5°
DIA. ANGLE	67.0°	53.2°
DISTORTION (TV)	-0.2%	-0.2%
WORKING DISTANCE 500mm	-0.012x	
OPTICAL 400mm	-0.015x	
MAGNIFICATION 300mm	-0.020x	
200mm	-0.039x	
100mm	-0.054x	
MINIMUM FOCUS DISTANCE	0.1m	
FLANGE BACK	17.526 mm in air	
BACK FOCUS	8.2mm in air	
FILTER SCREW SIZE	M30.5x0.5	
FRONT/REAR EFFECTIVE DIA.	ϕ21.1mm ϕ15.4mm	
MOUNT	C-MOUNT	
EXIT PUPIL	-112mm	
TEMPERATURE RANGE	-10~+45° C	
STORAGE TEMPERATURE RANGE	-40~+60° C	
RESOLUTION CENTER/CORNER	120 lp/mm 100 lp/mm	

		MEGA 1/2" F1.2/6mm		
		LM6NCM		